VISTA

105138

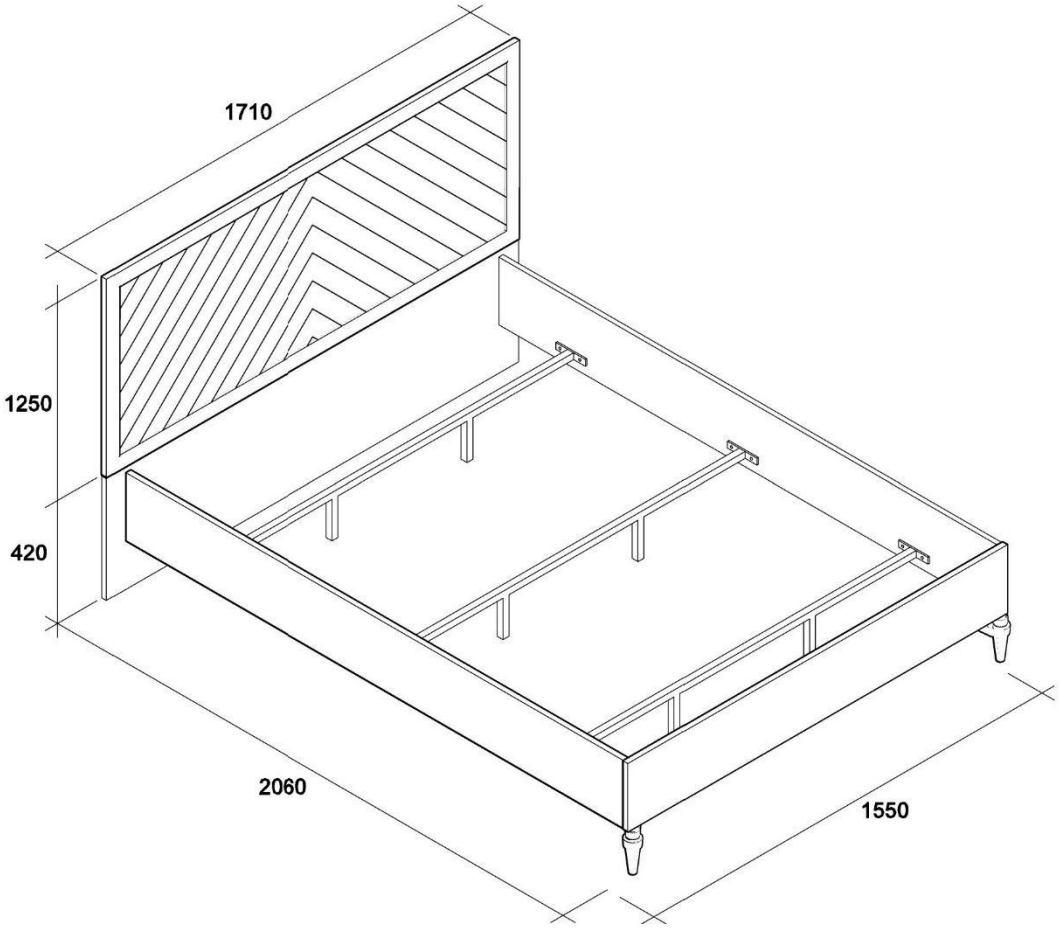

x30	x	x8	x6	x12	x12				x4

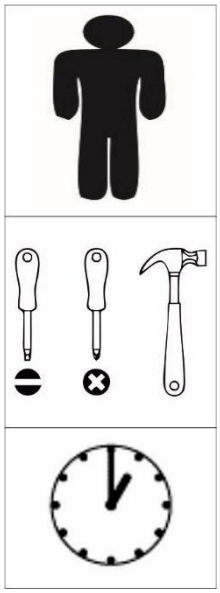

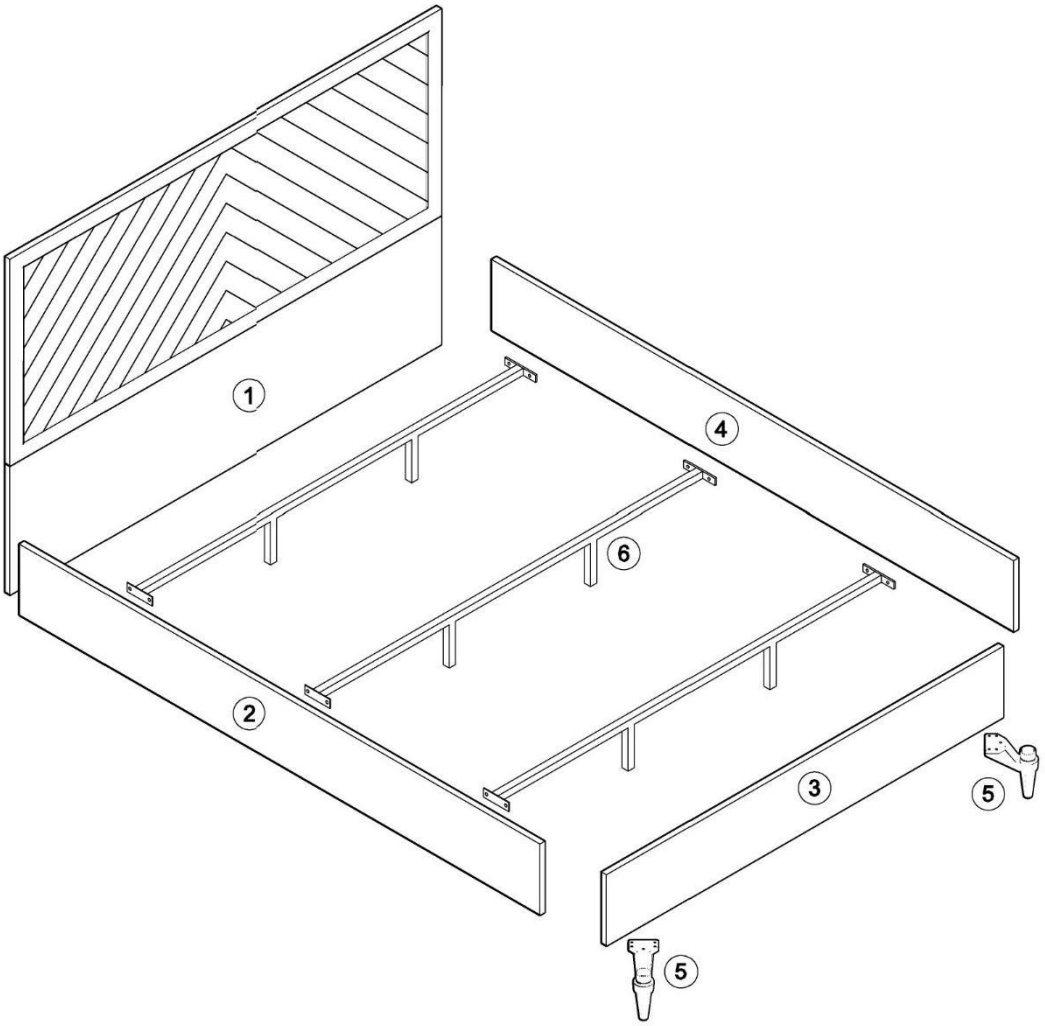
1
2
3
4
5
5
6