# VISTA

105142

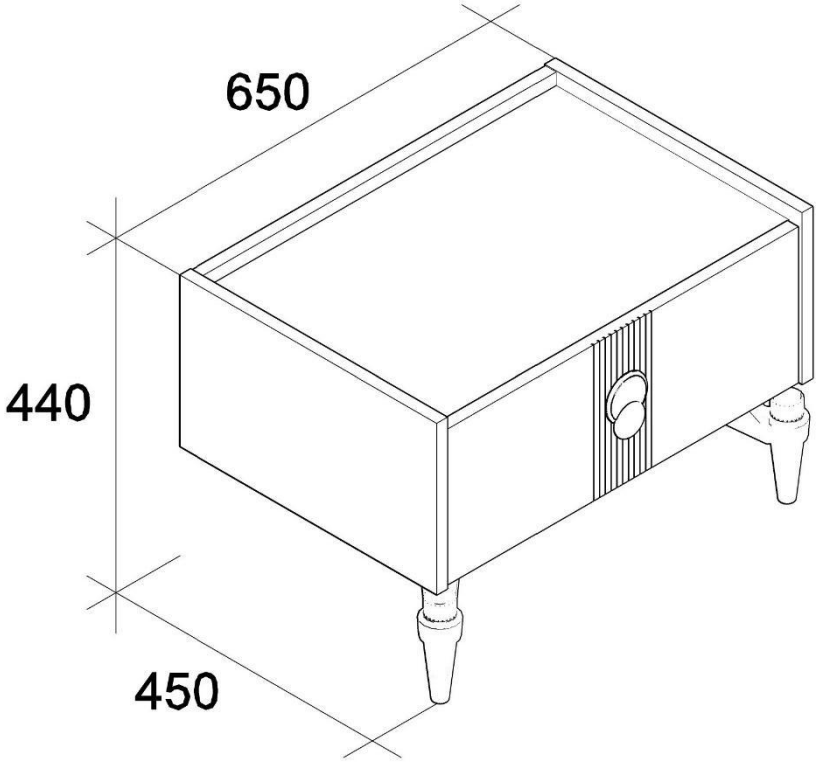


| | | | | | | | | | |
|---|---|---|---|---|---|---|---|---|---|
| x12 | x4 x1 | x6 | | x12 | x1 | x8 | x12 | x10 | x2 |
| | | | | | | | | | |

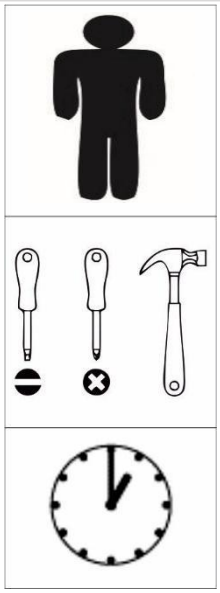

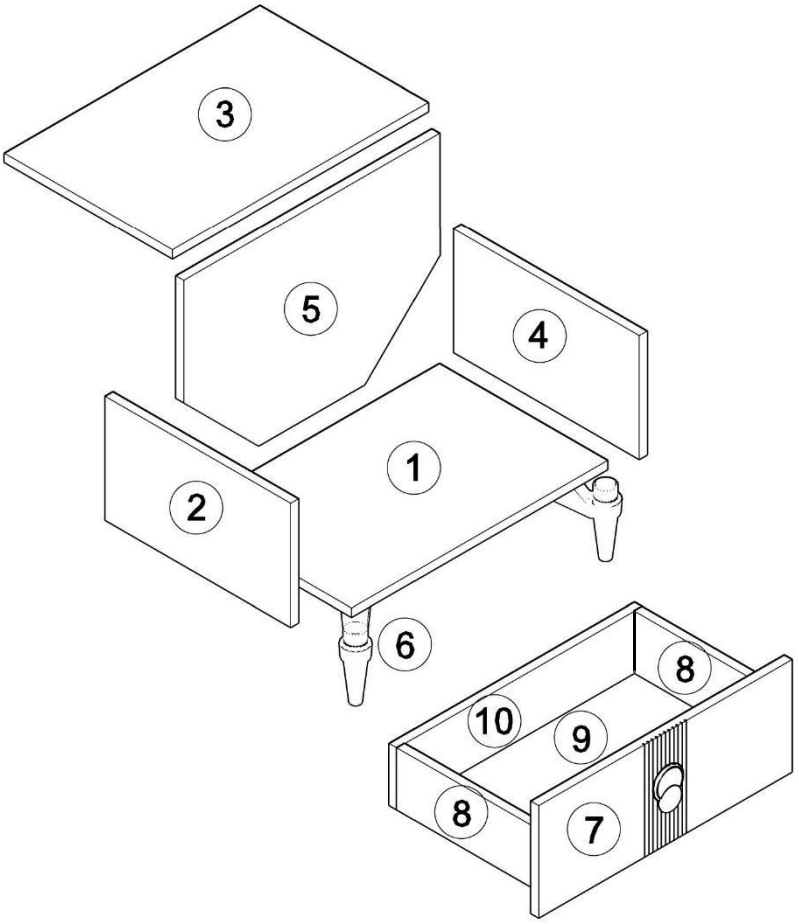
3
5
4
1
2
6
8
10
9
8
7

①

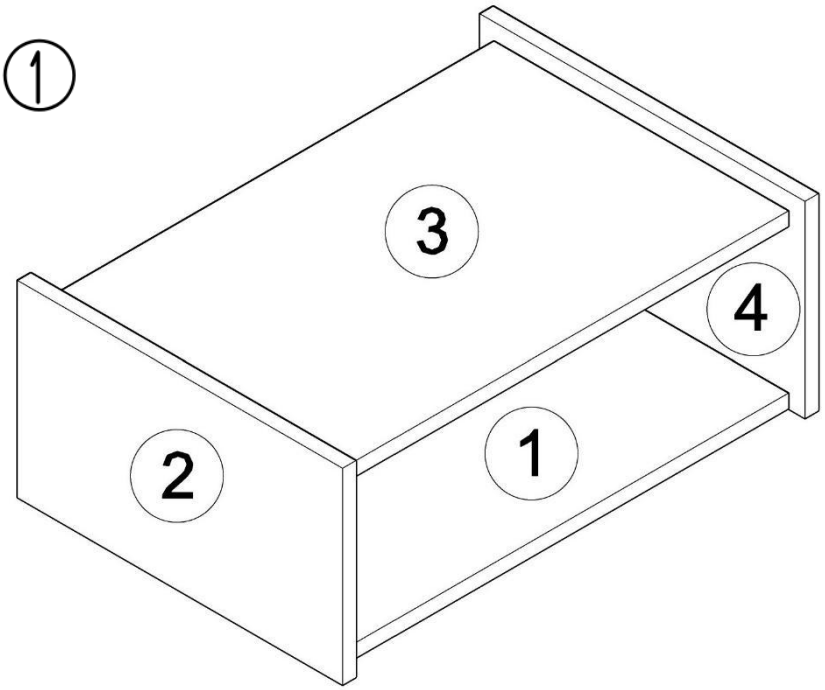

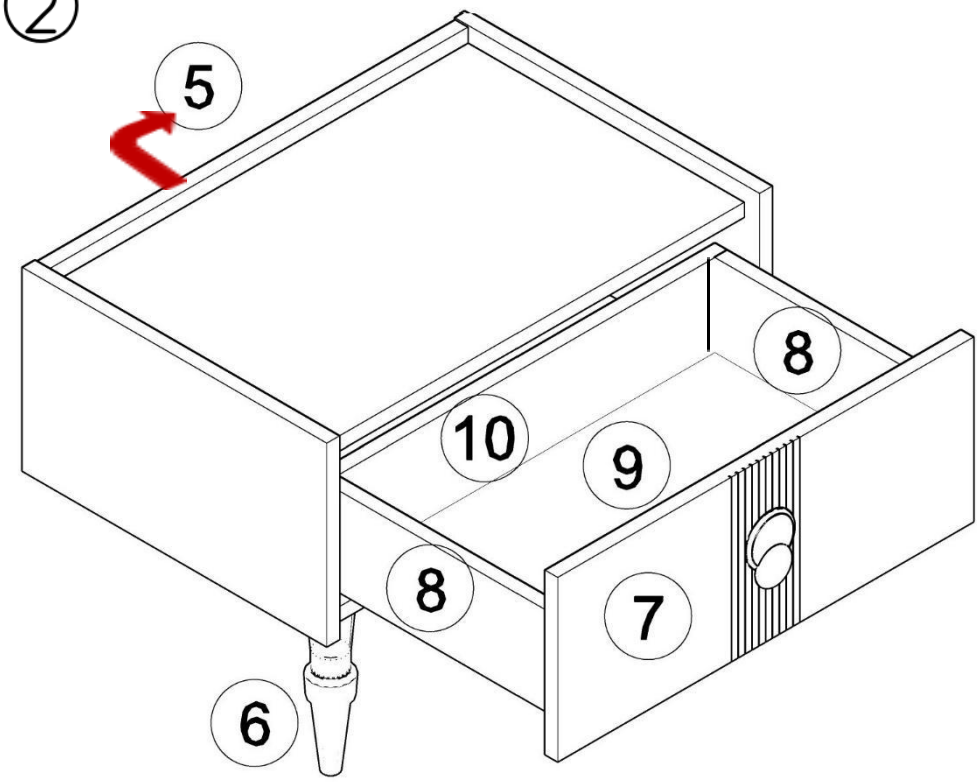
②