LENA

105101

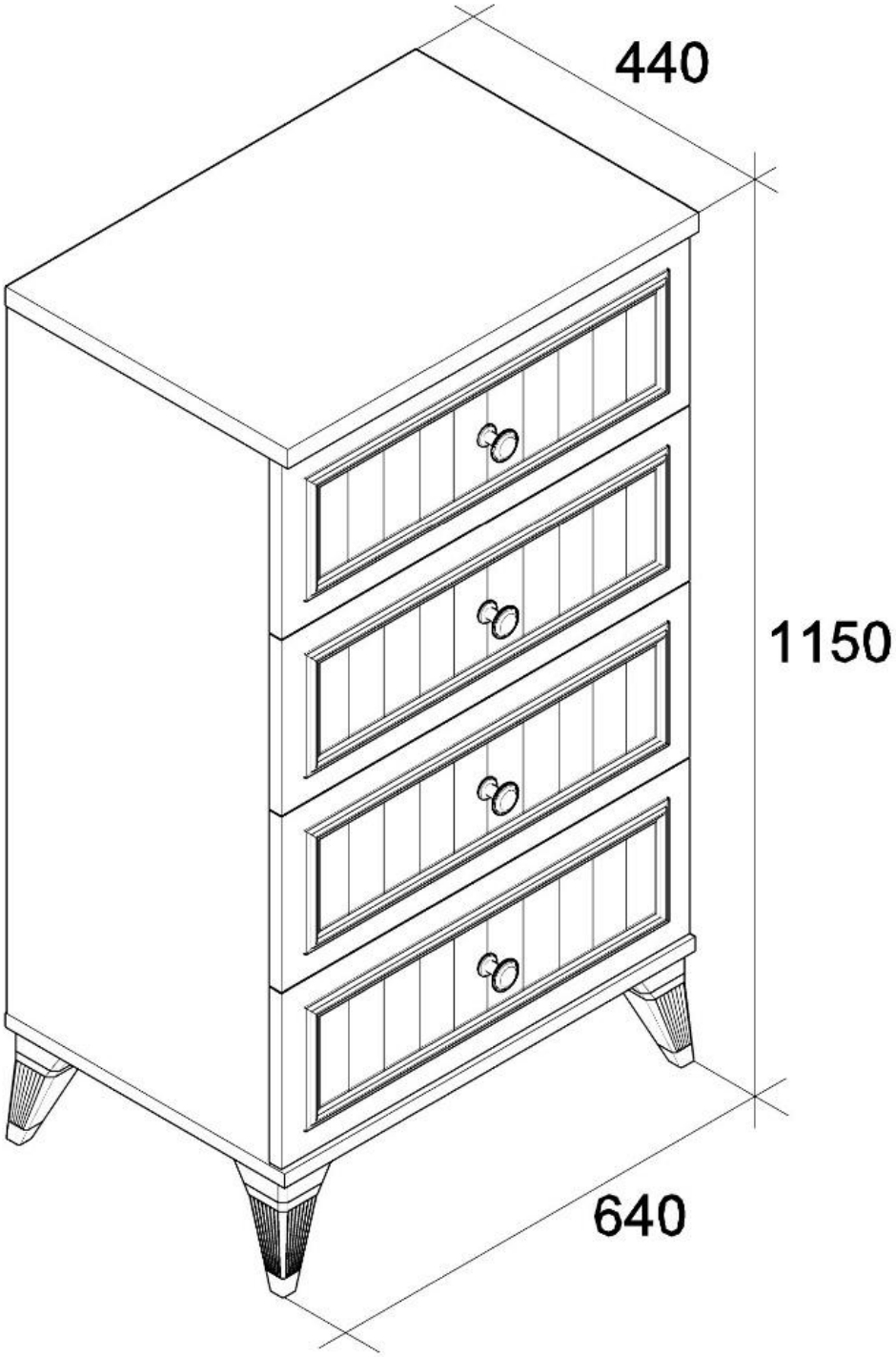

22x 8x30	10x	26x	26x	32x 3.5x18	10x 4x20	12x M6x40	8x 6x50	4x 4x22	4x 35x350mm
16x Q15mm	4x								

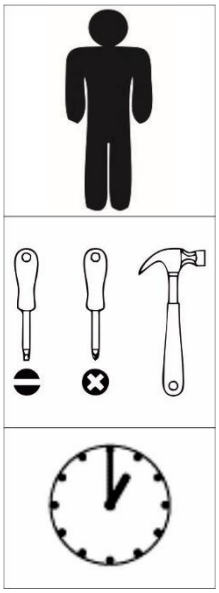

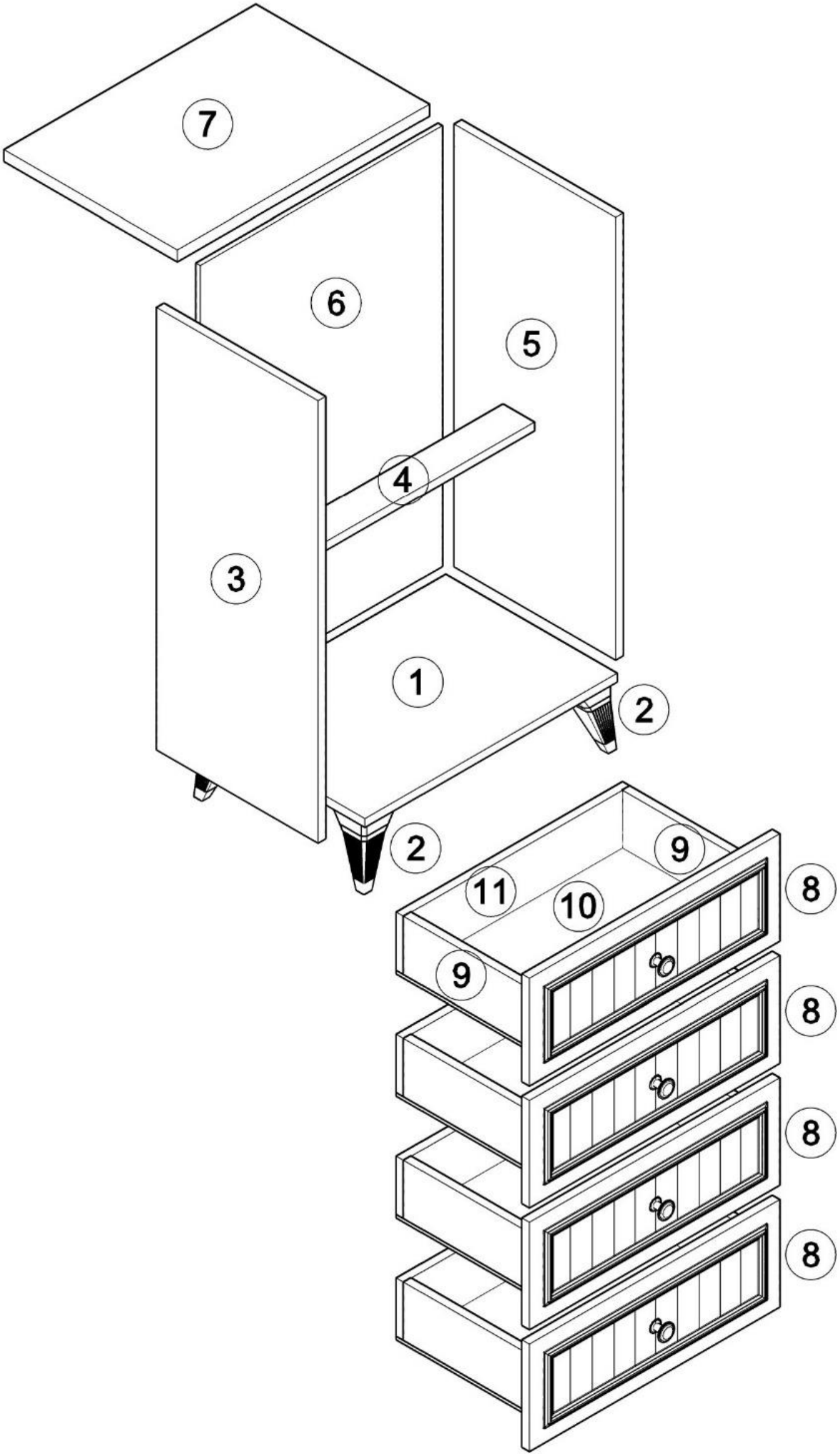
7
6
5
4
3
1
2
2
9
11
10
9
8
8
8
8

①

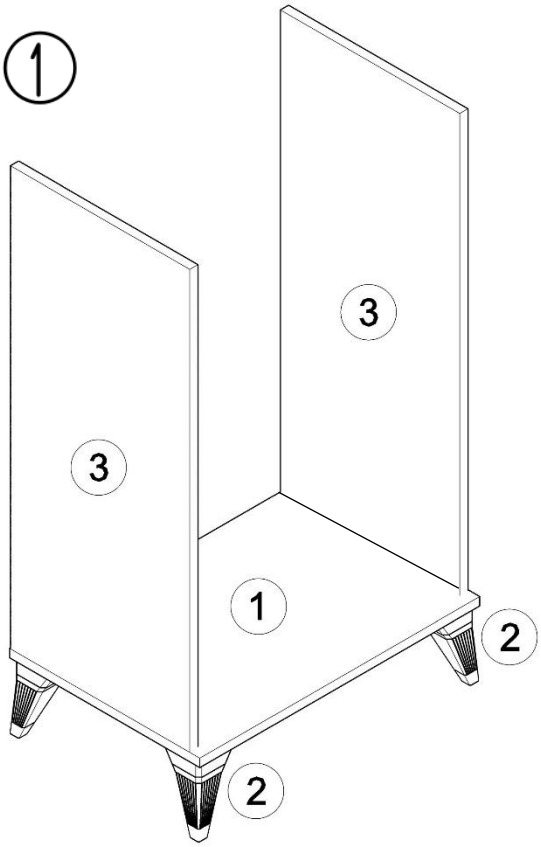

②

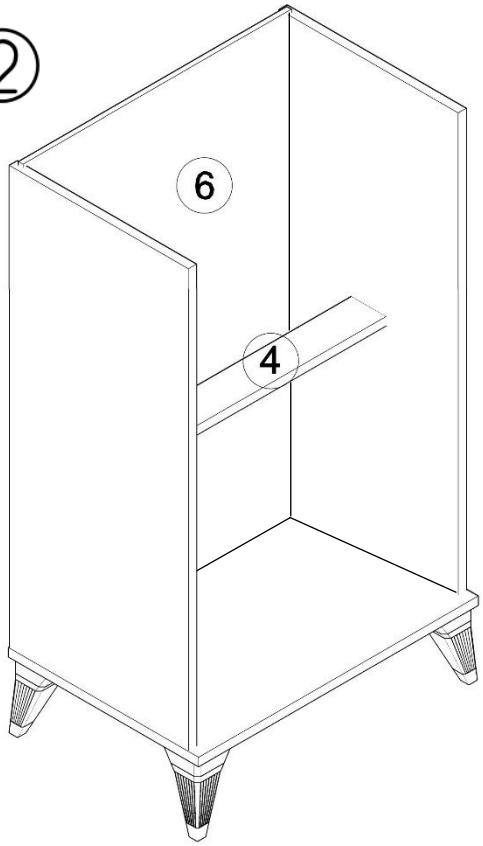

③

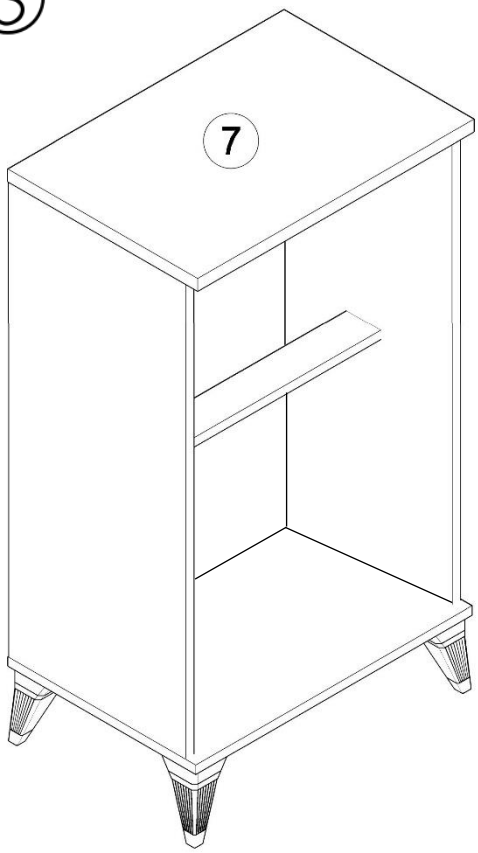
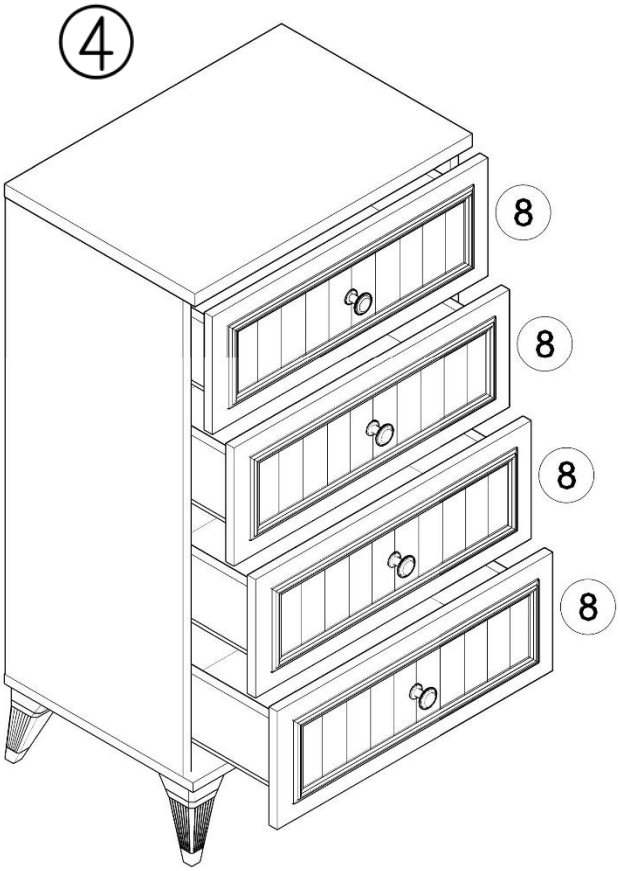
④