LENA

105096

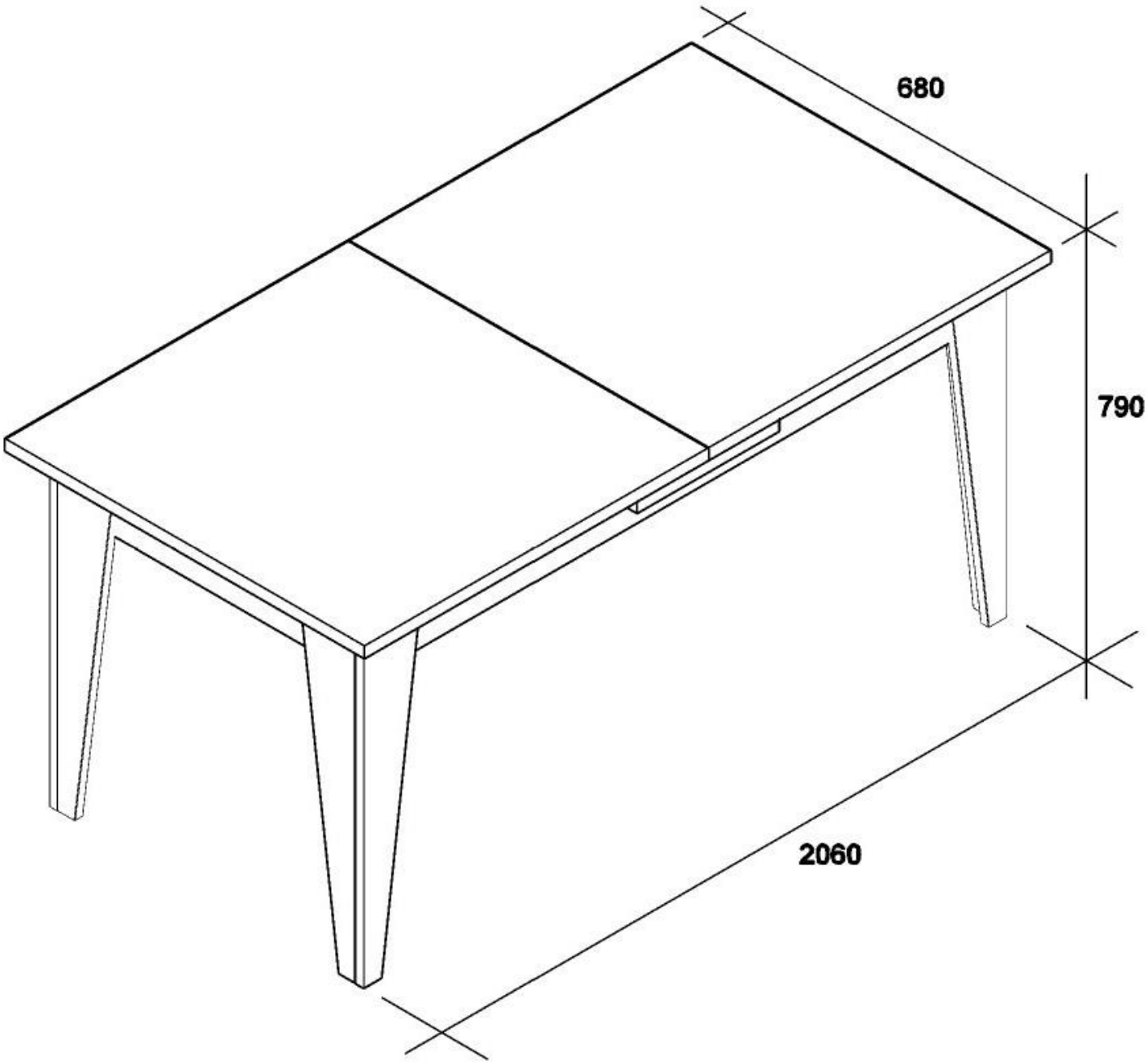

24x M6x300	24x								

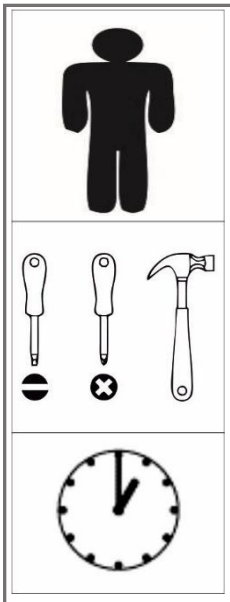

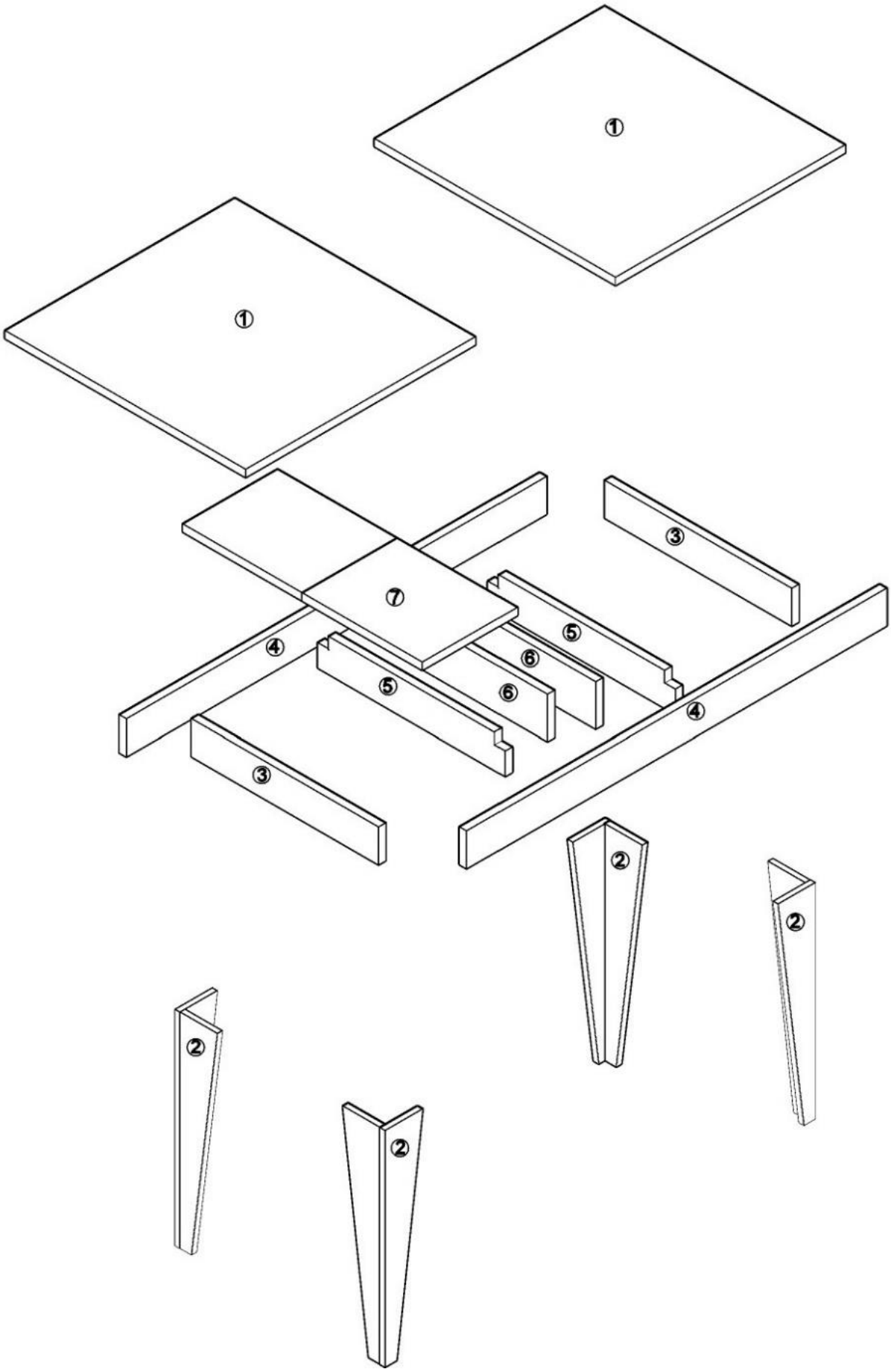
①
①
③
⑦
⑤
④
⑥
⑤
⑥
④
③
②
②
②
②

①

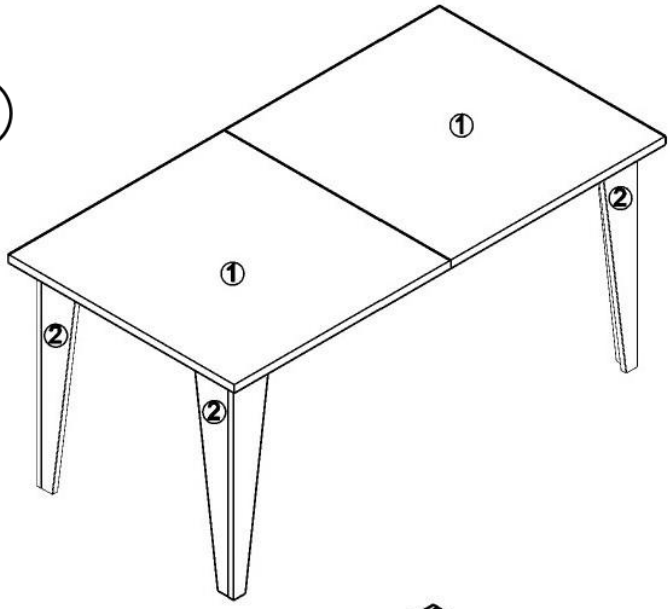

②

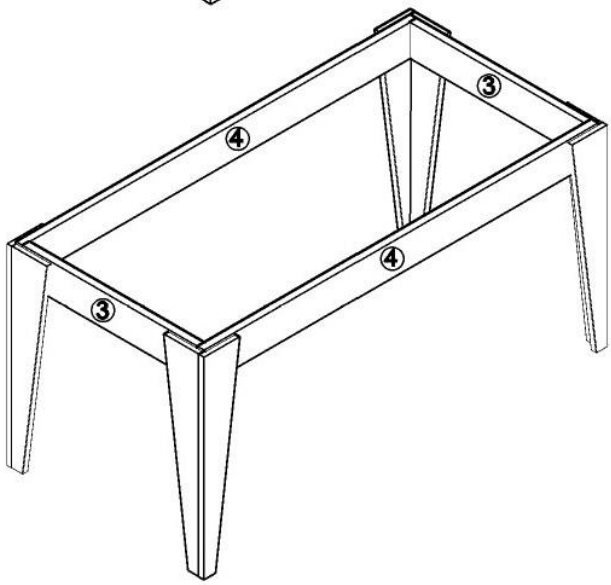
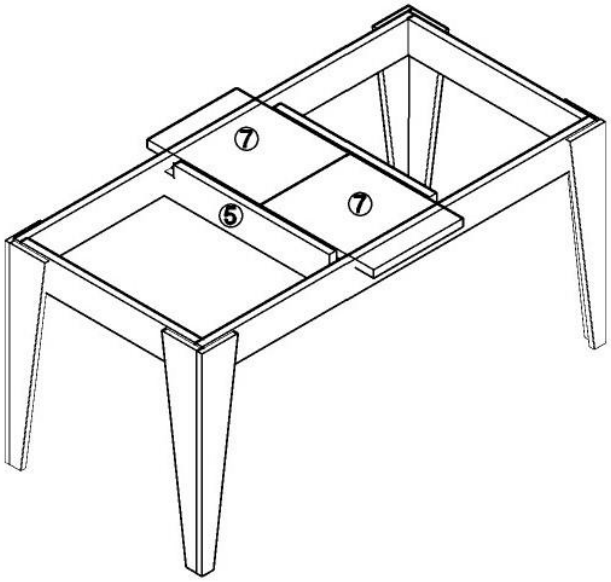
③