LENA

105090

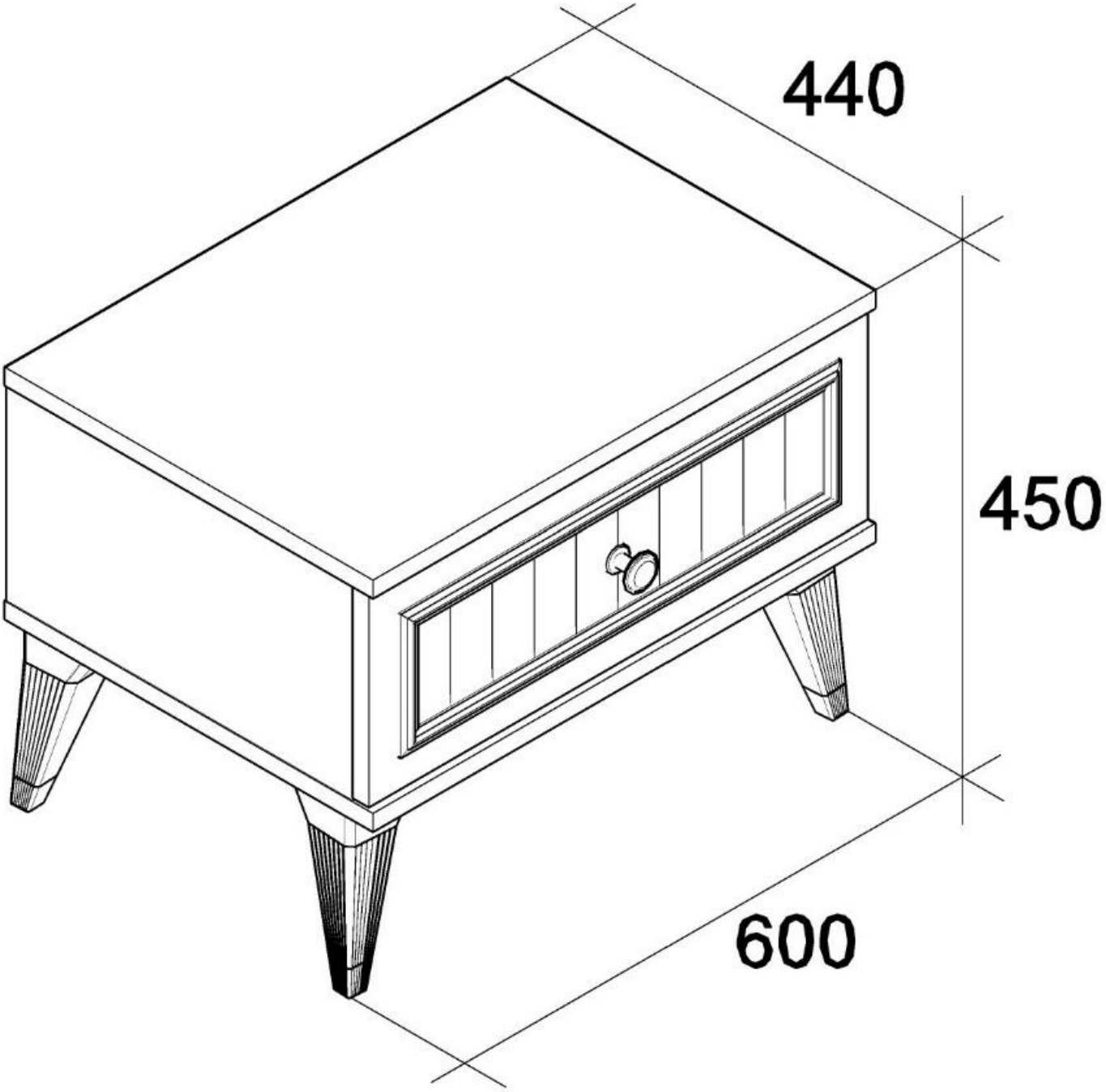

12x 8x30	6x	12x	12x	8x 3.5x18	6x 4x20	12x M6x40	2x 6x50	1x 4x22	1x 35x350mm
4x Q15mm	1x								

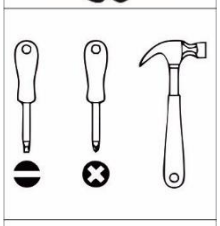

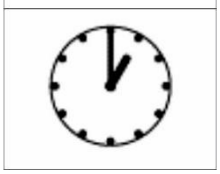

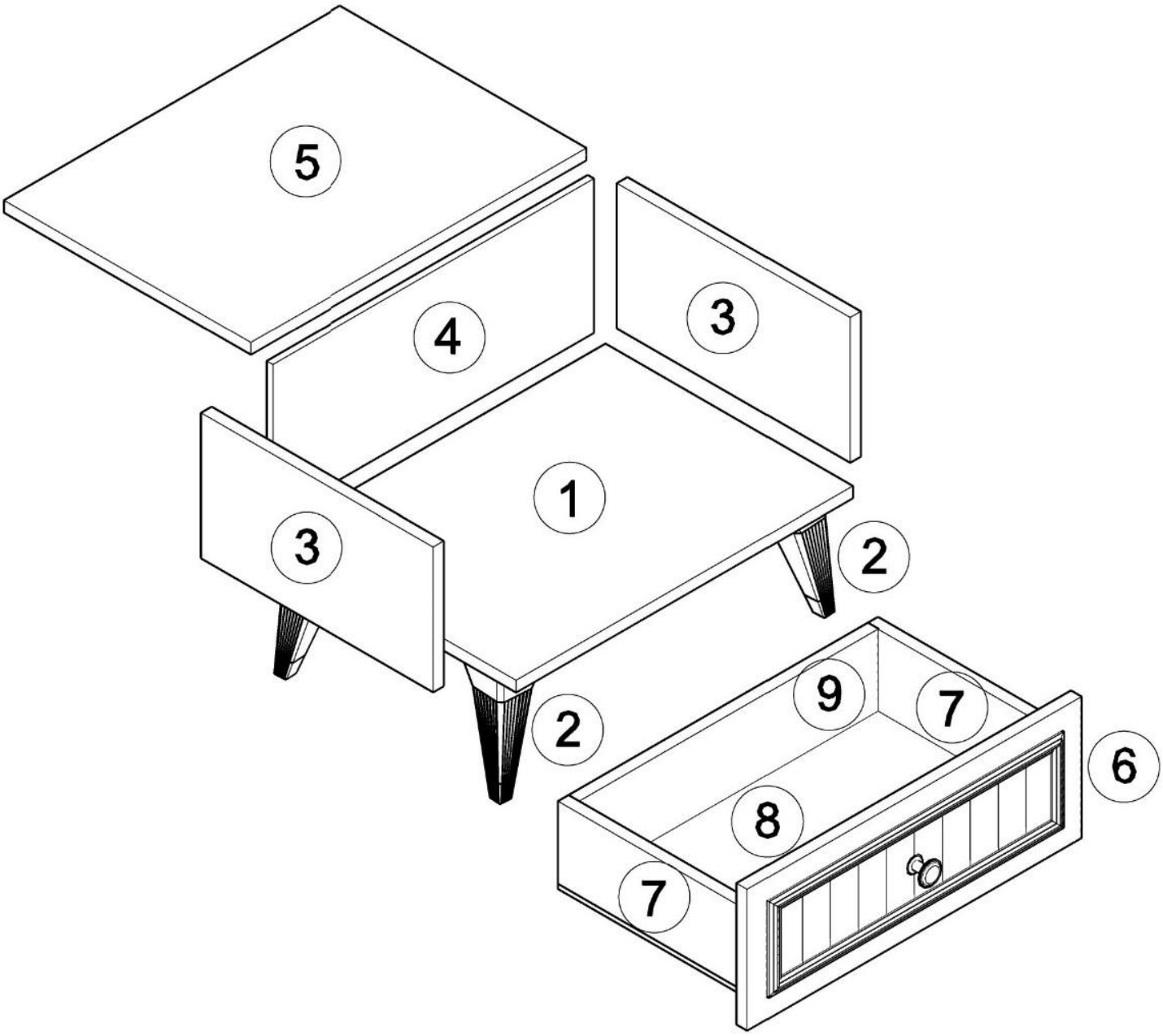
5
4
3
1
3
2
2
9
7
6
8
7

①

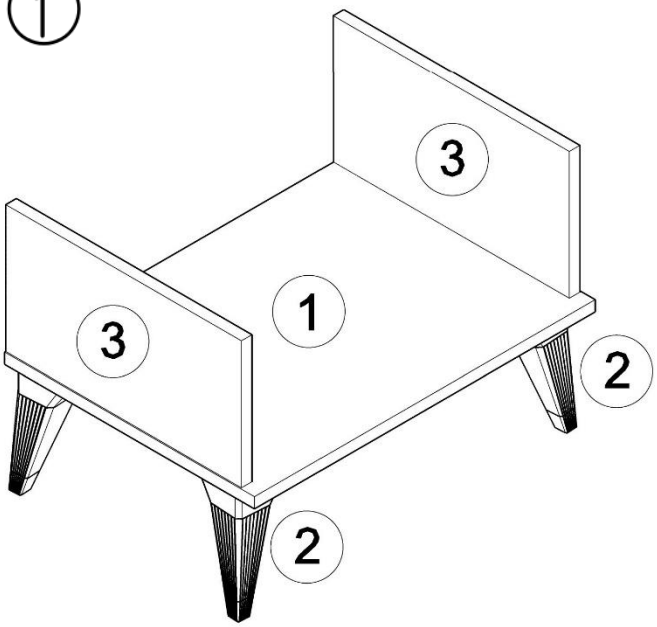

②

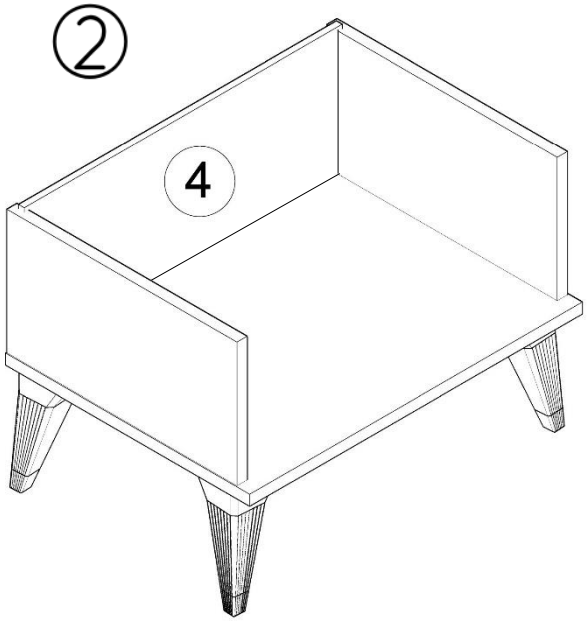

③

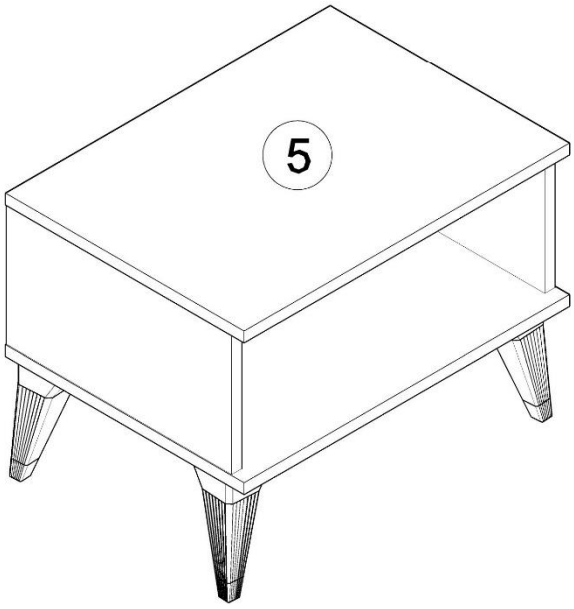
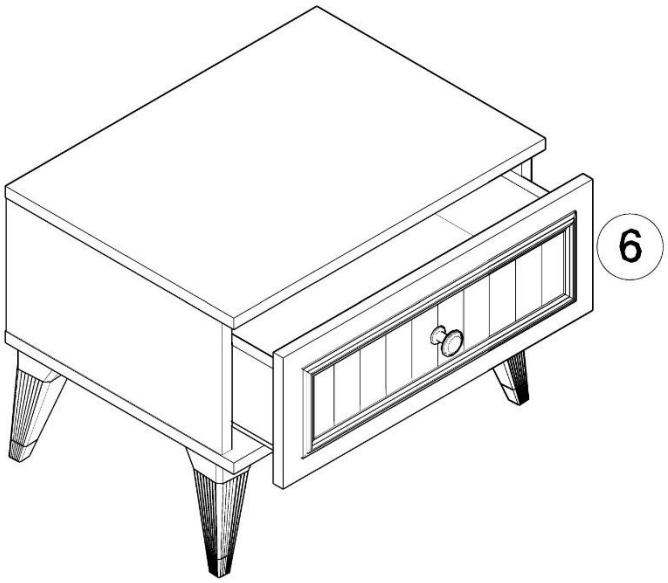
④