VISTA

105185

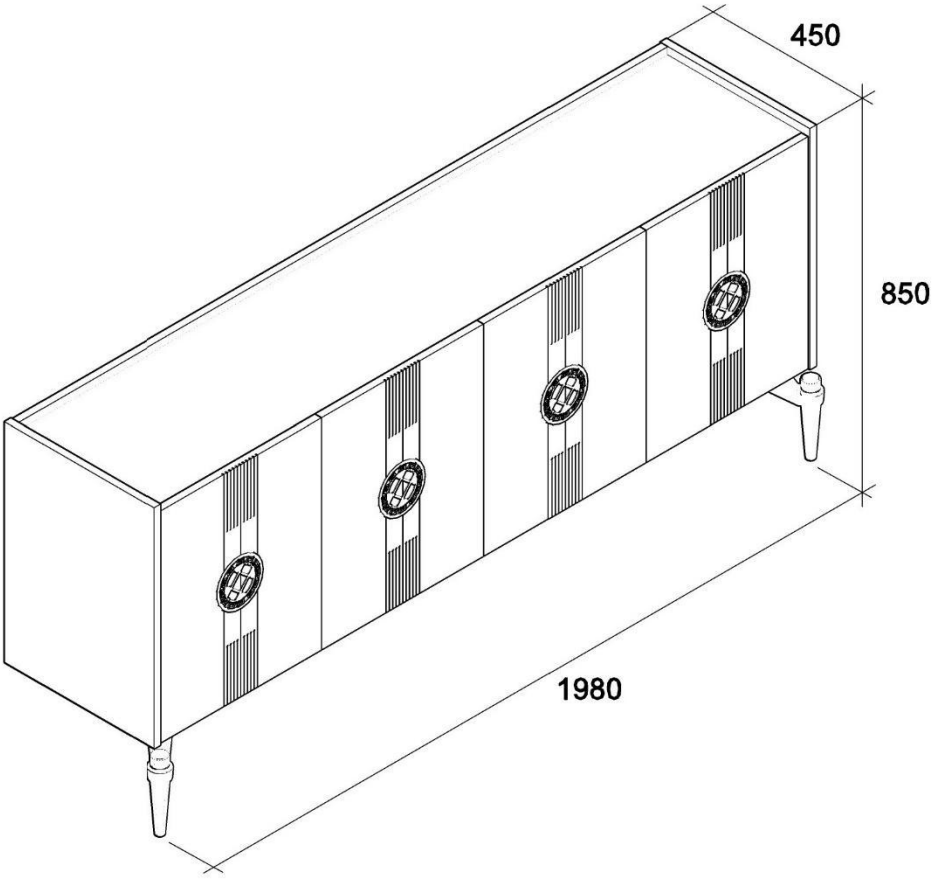

x16	x4 x2	x4 x8	x20	x16	x12	x20	x32	x8	x3

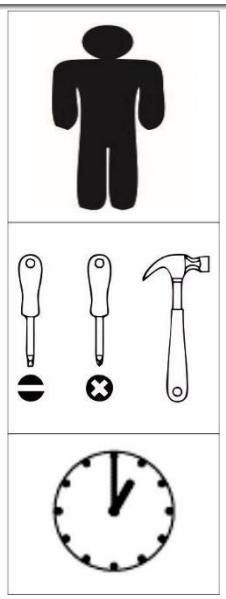

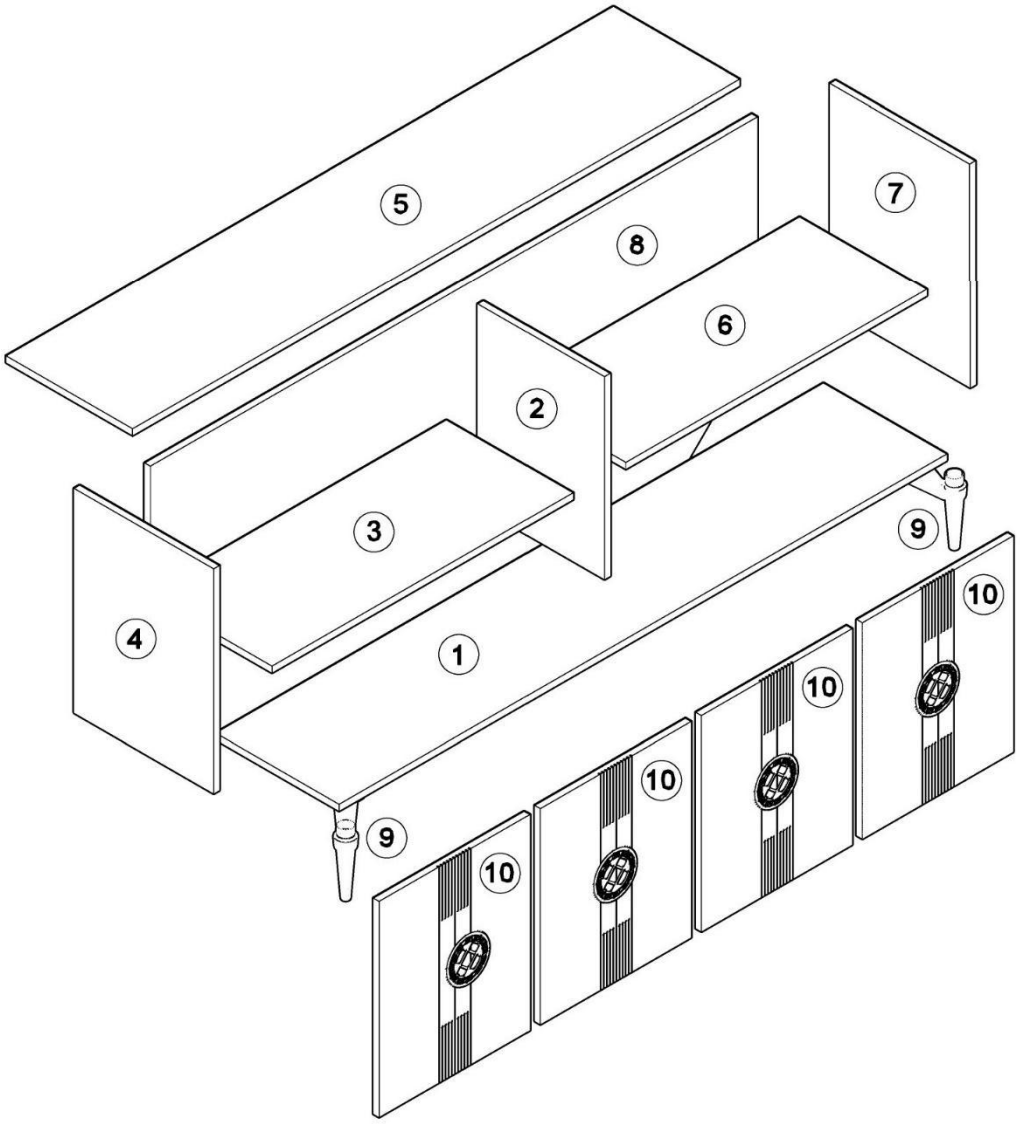
5
8
7
6
2
3
9
4
1
10
10
10
10
9
10

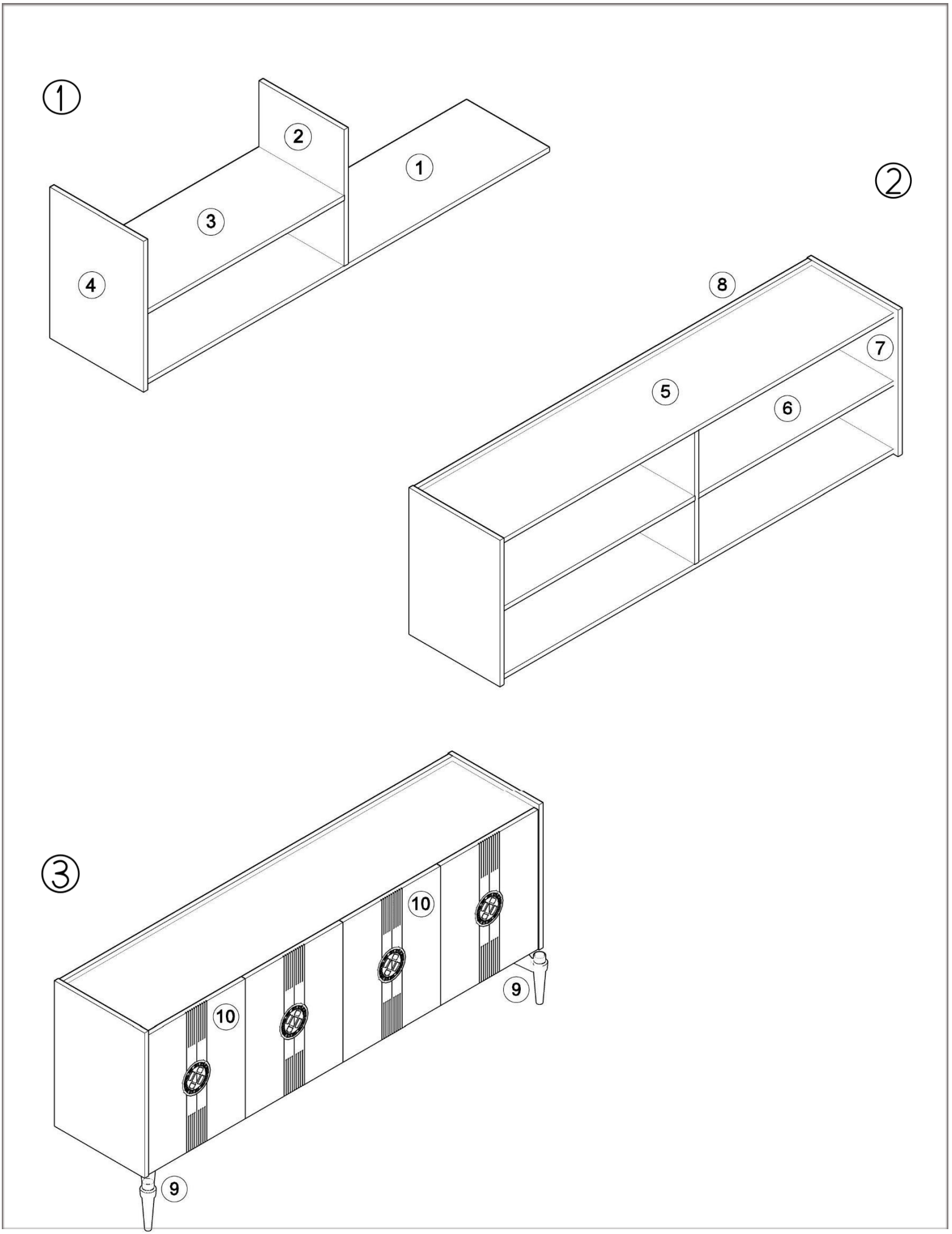
1
2
1
3
4
2
8
7
5
6
3
10
10
9
9